CanadianSolar

# HiKu

## HIGH POWER MONO PERC MODULE

## 360W~385W

### CS3L-360|365|370|375|380|385MS

### MORE POWER

26 % higher power than conventional modules

Up to 4.5 % lower LCOE
Up to 2.7 % lower system cost

Low NMOT: 41 ± 3 °C
Low temperature coefficient (Pmax): -0.34 % / °C

Better shading tolerance

### MORE RELIABLE

Lower internal current, lower hot spot temperature

Minimizes micro-crack impacts

Heavy snow load up to 5400 Pa, wind load up to 3600 Pa*

* For detailed information, please refer to Installation Manual.

**25 Years** Industry Leading Product Warranty on Materials and Workmanship*

**25 Years** Linear Power Performance Warranty*

**1st year power degradation no more than 2%**
**Subsequent annual power degradation no more than 0.55%**

*Subject to the terms and conditions contained in the applicable Canadian Solar Limited Warranty Statement. Also this 25-year limited product warranty is available only for products installed and operating on residential rooftops in certain regions.

### MANAGEMENT SYSTEM CERTIFICATES*

ISO 9001:2015 / Quality management system
ISO 14001:2015 / Standards for environmental management system
ISO 45001: 2018 / International standards for occupational health & safety

### PRODUCT CERTIFICATES*

IEC 61215 / IEC 61730 / CE / MCS / INMETRO / UKCA
UL 61730 / IEC 61701 / IEC 62716
UNI 9177 Reaction to Fire: Class 1 / Take-e-way

* The specific certificates applicable to different module types and markets will vary, and therefore not all of the certifications listed herein will simultaneously apply to the products you order or use. Please contact your local Canadian Solar sales representative to confirm the specific certificates available for your product and applicable in the regions in which the products will be used.

**CSI Solar Co., Ltd.** is committed to providing high quality solar photovoltaic modules, solar energy and battery storage solutions to customers. The company was recognized as the No. 1 module supplier for quality and performance/price ratio in the IHS Module Customer Insight Survey. Over the past 20 years, it has successfully delivered over 63 GW of premium-quality solar modules across the world.

**CSI Solar Co., Ltd.**
199 Lushan Road, SND, Suzhou, Jiangsu, China, 215129, www.csisolar.com, support@csisolar.com

## ENGINEERING DRAWING (mm)

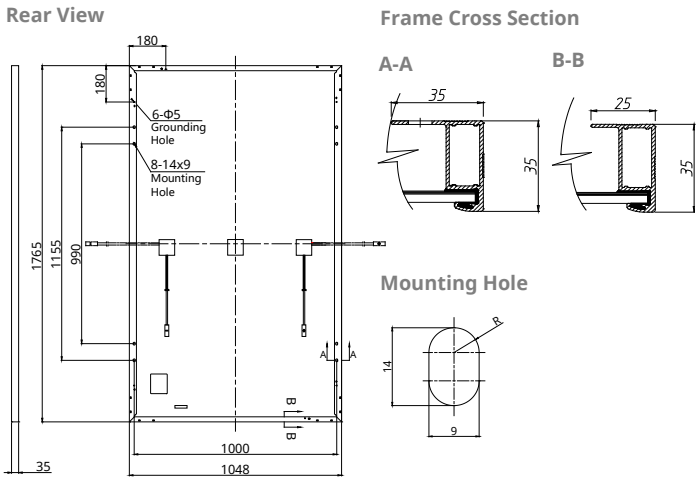


## CS3L-360MS / I-V CURVES

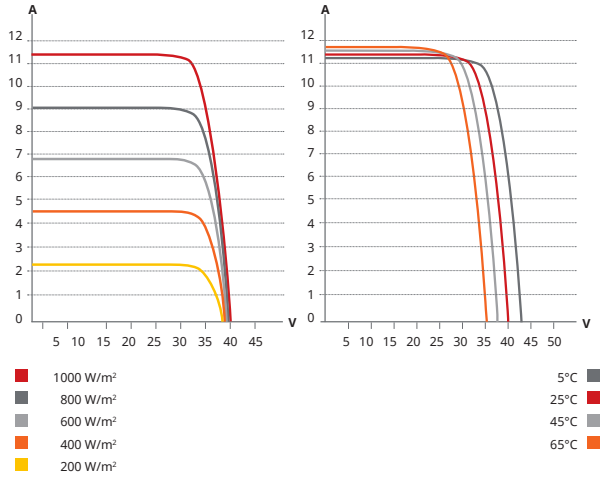


## ELECTRICAL DATA | STC*

| CS3L | 360MS | 365MS | 370MS | 375MS | 380MS | 385MS |
|---|---|---|---|---|---|---|
| Nominal Max. Power (Pmax) | 360 W | 365 W | 370 W | 375 W | 380 W | 385 W |
| Opt. Operating Voltage (Vmp) | 33.7 V | 33.9 V | 34.1 V | 34.3 V | 34.5 V | 34.7 V |
| Opt. Operating Current (Imp) | 10.69 A | 10.78 A | 10.86 A | 10.94 A | 11.02 A | 11.10 A |
| Open Circuit Voltage (Voc) | 40.4 V | 40.6 V | 40.8 V | 41.0 V | 41.2 V | 41.4 V |
| Short Circuit Current (Isc) | 11.40 A | 11.47 A | 11.54 A | 11.61 A | 11.68 A | 11.75 A |
| Module Efficiency | 19.5% | 19.7% | 20.0% | 20.3% | 20.5% | 20.8% |
| Operating Temperature | -40°C ~ +85°C | | | | | |
| Max. System Voltage | 1500V (IEC/UL) or 1000V (IEC/UL) | | | | | |
| Module Fire Performance | TYPE 1 (UL 61730 1500V) or TYPE 2 (UL 61730 1000V) or CLASS C (IEC 61730) | | | | | |
| Max. Series Fuse Rating | 20 A | | | | | |
| Application Classification | Class A | | | | | |
| Power Tolerance | 0 ~ + 10 W | | | | | |

* Under Standard Test Conditions (STC) of irradiance of 1000 W/m², spectrum AM 1.5 and cell temperature of 25°C.

## MECHANICAL DATA

| Specification | Data |
|---|---|
| Cell Type | Mono-crystalline |
| Cell Arrangement | 120 [2 X (10 X 6) ] |
| Dimensions | 1765 X 1048 X 35 mm<br>(69.5 X 41.3 X 1.38 in) |
| Weight | 20.5 kg (45.2 lbs) |
| Front Cover | 3.2 mm tempered glass with anti-reflective coating |
| Frame | Anodized aluminium alloy |
| J-Box | IP68, 3 bypass diodes |
| Cable | 4.0 mm² (IEC), 12 AWG (UL) |
| Cable Length (Including Connector) | Portrait: 500 mm (19.7 in) (+) / 350 mm (13.8 in) (-) ; landscape: 1250 mm (49.2 in)* |
| Connector | T4 series or MC4-EVO2 |
| Per Pallet | 30 pieces |
| Per Container (40' HQ) | 780 pieces |

* For detailed information, please contact your local Canadian Solar sales and technical representatives.

## ELECTRICAL DATA | NMOT*

| CS3L | 360MS | 365MS | 370MS | 375MS | 380MS | 385MS |
|---|---|---|---|---|---|---|
| Nominal Max. Power (Pmax) | 270 W | 274 W | 278 W | 281 W | 285 W | 289 W |
| Opt. Operating Voltage (Vmp) | 31.6 V | 31.8 V | 32.0 V | 32.2 V | 32.3 V | 32.5 V |
| Opt. Operating Current (Imp) | 8.55 A | 8.62 A | 8.68 A | 8.75 A | 8.81 A | 8.88 A |
| Open Circuit Voltage (Voc) | 38.2 V | 38.4 V | 38.6 V | 38.8 V | 38.9 V | 39.1 V |
| Short Circuit Current (Isc) | 9.19 A | 9.25 A | 9.31 A | 9.36 A | 9.42 A | 9.47 A |

* Under Nominal Module Operating Temperature (NMOT), irradiance of 800 W/m², spectrum AM 1.5, ambient temperature 20°C, wind speed 1 m/s.

## TEMPERATURE CHARACTERISTICS

| Specification | Data |
|---|---|
| Temperature Coefficient (Pmax) | -0.34 % / °C |
| Temperature Coefficient (Voc) | -0.26 % / °C |
| Temperature Coefficient (Isc) | 0.05 % / °C |
| Nominal Module Operating Temperature | 41 ± 3°C |

## PARTNER SECTION

bürgstein
ELEKTROTECHNIK
ERNEUERBARE ENERGIE

* The specifications and key features contained in this datasheet may deviate slightly from our actual products due to the on-going innovation and product enhancement .CSI Solar Co., Ltd. reserves the right to make necessary adjustment to the information described herein at any time without further notice.
Please be kindly advised that PV modules should be handled and installed by qualified people who have professional skills and please carefully read the safety and installation instructions before using our PV modules.


**CSI Solar Co., Ltd.**
199 Lushan Road, SND, Suzhou, Jiangsu, China, 215129, www.csisolar.com, support@csisolar.com



Feb. 2022. All rights reserved, PV Module Product Datasheet V5.8C25_EN